NAME:

DATE:

PROJECT:

AA
POST TOP

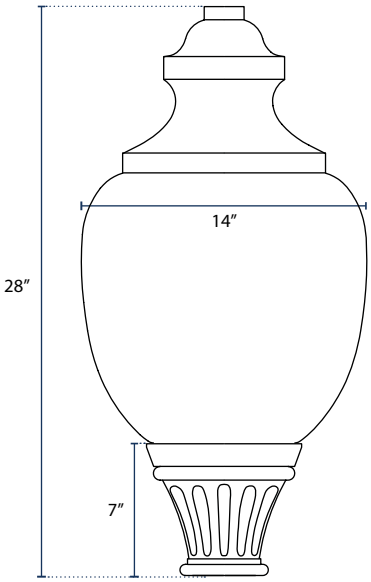

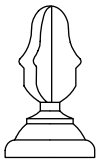

GF-1

SPECIFICATIONS

Casting
Cast Aluminum
(Globeholder)

Globe
26A Acrylic Acorn

Post Top EPA
0.959 ft^2

Finish
Polyester Powder-Coat
Electrostatically
Applied & Thermocured

Mounting
3.1″ Inside Diameter

Post Top
Height: 28″
Width: 14″

Pole
Fits all Brandon Industries 3″ and 4″ poles and 5″ poles with a tenon

Efficiency
Integrated LED: 110 lm/W
Removable LED Bulb: 120-140 lm/W

ORDERING

POST TOP	LAMP TYPE	OPTICS	WATTAGE	CCT	FINISH	OPTIONS
AA						
	INT Integrated LED	**TYPE V**	**30W** **50W**	**30** 3000K **40** 4000K **50** 5000K	**BK** Black **DB** Dark Bronze **GN** Dark Green **VG** Verde Green	**PC** Photocell **GF-1** Finial
	CC Removable LED Bulb	**TYPE V**	**18W** **27W** **36W** **54W**			
	MED Medium Socket Only **MOG** Mogul Socket Only	LEAVE BLANK	LEAVE BLANK			

ENERGY CHART

LAMP TYPE	WATTAGE	LUMEN	LM/W
INT	30W	3,300	110lm/w
INT	50W	5,500	110lm/w
CC	18W	2,520	140lm/w
CC	27W	3,800	140lm/w
CC	36W	5,000	140lm/w
CC	54W	7,600	140lm/w